4.0VA SEALED TRANSFORMER EI38X15 SERIERS

ORDERING CODE

BV	XX	2	S	15	010

Sealed Transformer

EI Lamination Size
Example
20,30,38,42,48,54,60,66

Input V
1=115V
2=230V

Output Type
S=Single
D=Dual

Output Voltage
06=6V
09=9V
12=12V, etc.

010=1VA
015=1.5VA
300=30VA, etc.

FEATURES

- CQC Approved:
  CQC file No.CQC 1001054660
- Vacuum Filling
- Split Bobbin Design
- Self-Extinguishing Plastics UL94V-0
- Dielectric Strength:
  INPUT:230V 4200Vrms
  INPUT:115V 2800Vrms
- Operation Frequency:50/60Hz
- Resin Class B IEC 85
  (20,000 h Testing to IEC 216)
- 100% Production Tested

OUTLINE DIMENSIONS

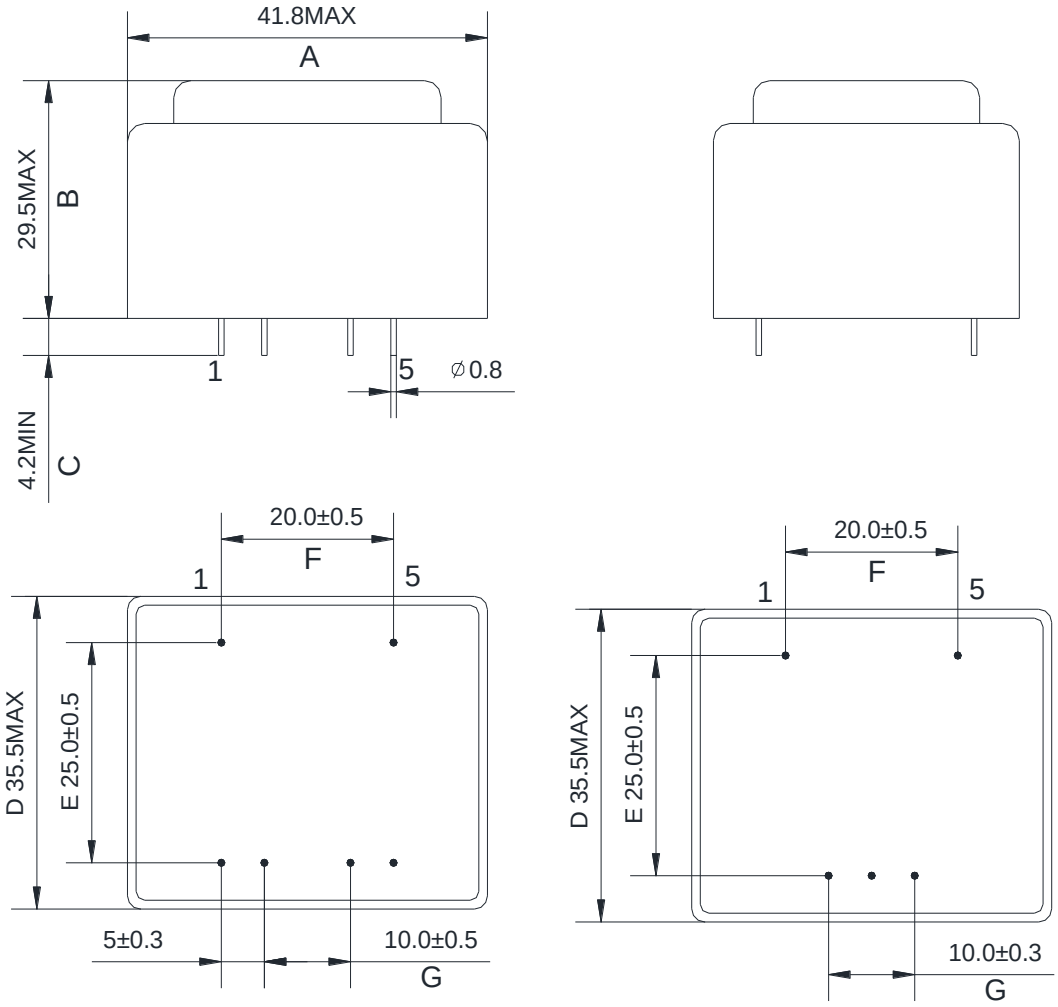

Dual outputs

Single output

SCHEMATIC DIAGRAM:

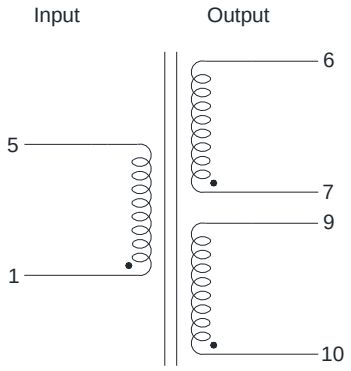

Dual outputs

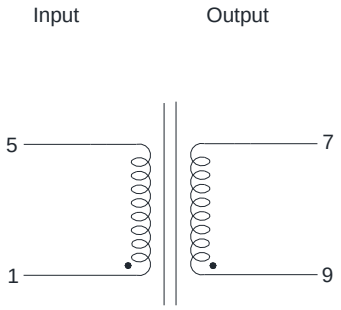

Single output

ELECTRONIC SPECIFICATIONS

Order Number	Input Voltage (V)	SEC. Voltage (V)	Rated Current (mA)	Rated Power (VA	No-load Voltage (V)	Ambient TEMP. (℃)	Weight (g)	Certificate			
								VDE	UL	CQC	CE
BV381S06040	115V	6	666.67	4.0	8.0	T70B	158			●	
BV381S09040	115V	9	444.44	4.0	12.0	T70B	158			●	
BV381S10040	115V	10	400	4.0	14.0	T70B	158			●	
BV381S12040	115V	12	333.33	4.0	16.0	T70B	158			●	
BV381S15040	115V	15	266.67	4.0	20.0	T70B	158			●	
BV381S18040	115V	18	222.22	4.0	24.1	T70B	158			●	
BV381S24040	115V	24	166.67	4.0	34.0	T70B	158			●	
BV381D06040	115V	2x6	2x333	4.0	2x8	T70B	158			●	
BV381D09040	115V	2x9	2x222	4.0	2x12	T70B	158			●	
BV381D10040	115V	2x10	2x200	4.0	2x14	T70B	158			●	
BV381D12040	115V	2x12	2x167	4.0	2x16	T70B	158			●	
BV381D15040	115V	2x15	2x133	4.0	2x20	T70B	158			●	
BV381D18040	115V	2x18	2x111	4.0	2x24.1	T70B	158			●	
BV381D24040	115V	2x24	2x83.5	4.0	2x34.0	T70B	158				
BV382S06040	230V	6	666.67	4.0	8.0	T70B	158			●	
BV382S09040	230V	9	444.44	4.0	12.0	T70B	158			●	
BV382S10040	230V	10	400	4.0	14.0	T70B	158			●	
BV382S12040	230V	12	333.33	4.0	16.0	T70B	158			●	
BV382S15040	230V	15	266.67	4.0	20.0	T70B	158			●	
BV382S18040	230V	18	222.22	4.0	24.1	T70B	158			●	
BV382S24040	230V	24	166.67	4.0	34.0	T70B	158			●	
BV382D06040	230V	2x6	2x333	4.0	2x8	T70B	158			●	
BV382D09040	230V	2x9	2x222	4.0	2x12	T70B	158			●	
BV382D10040	230V	2x10	2x200	4.0	2x14	T70B	158			●	
BV382D12040	230V	2x12	2x167	4.0	2x16	T70B	158			●	
BV382D15040	230V	2x15	2x133	4.0	2x20	T70B	158			●	
BV382D18040	230V	2x18	2x111	4.0	2x24.1	T70B	158			●	
BV382D24040	230V	2x24	2x83.5	4.0	2x34.0	T70B	158				